AMECO®

The Power of Know-How

STACKERS • RECLAIMERS • SHIPLOADERS • STORAGE SYSTEMS

AMECO TECHNOLOGIES®

ROTARY SCRAPERS FOR PRILLING TOWERS • BRIDGE RECLAIMERS

WELCOME

AMECO offers a full line of Stackers, Reclaimers and Blending Systems as well as Shiploaders for handling all kind of bulk materials such as coal, petcoke, limestone, clay, clinker, fertilizers, sulphur, wood chips and bark, ores, etc...

With more than 280 handling equipments in operation in the world, AMECO is a reference supplier in the Chemical and Petro-Chemical Industries, Mining Industry, Pulp and Paper Industry, Power Generation and Co-Generation as well as Ports and Harbour Facilities.

The highly performing teams of specialists are equipped with sophisticated design tools is at your disposal for designing, specifying and supplying any material handling, machines handling, bulk and/or bagged products, but has a special interest for :

1. Reclaimers
Portal Reclaimers, Semi and Three Quarter Portal reclaimers, Side scrapers, Traveling and slewing reclaimers located centrally to the pile, Longitudinal and Circular Blending Type Bridge Reclaimers.

2. Shiploaders
AMECO designs and supplies all kind of mechanical shiploaders handling bulk products of any type as well as bagged products. This line includes traveling, slewing and luffing types.

3. Stackers
AMECO designs and supplies fixed and traveling stackers, luffing and slewing traveling stackers.

4. Prilling Towers
AMECO designs and supplies a full line of prilling tower reclaimers either flat bottom or conical types. These machines are used in the process of manufacturing fertilizers such as Urea and Ammonium Nitrates.

5. Miscellaneous
Furthermore, AMECO handles a line of smaller products such as vibrating feeders, vibrating conveyors, paddle mixers for ash handling, automatic bag opening and emptying machines, truck loading machines for bags, railroad car loading machines, etc..

AMECO, the power of Know-How !

Stephane Killian
Chairman of the Board

AMECO'S Headquarters, Illfurth - France

PORTAL SCRAPER

The portal scraper is normally used in a production line as bulk material buffer store.
The store operates with stockpiles placed in line. While building up one pile, another pile is being reclaimed. Being the historically main product of AMECO since 1932, we have a strong knowledge in this system and our machines are handling a broad range of bulk materials, eg. woodchips, urea, ammonium nitrates, coal, gypsum, iron ores...

The input material comes on a rubber-belt conveyor and is discharged through the stacker traveling on rails alongside the store at a constant speed. Its height above the top of the pile is kept at a minimum distance to reduce dust emission.
Alternatively, stacking can take place by using a tripper car supported by a frame structure above the pile.
The stacker and the portal scraper travel on separate rails along the store.

The portal scraper reclaimer is moving alongside the pile to be reclaimed onto two tracks supported on concrete foundations and located at each side of the pile.
The reclaiming is accomplished by one or several luffing scraper arm(s) long enough to reach across the pile.
The arms are made of a boom equipped with chains and blades for dragging the material to a belt conveyor.

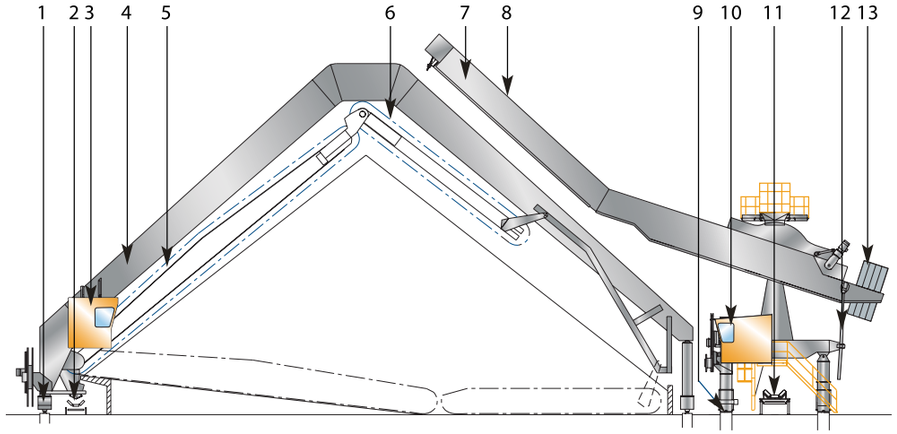

1 Portal reclaimer bogie
2 Outgoing belt conveyor
3 Operator cabin
4 Portal
5 Primary scraper chain
6 Secondary scraper chain
7 Boom
8 Belt conveyor on jib
9 Stacker bogie
10 Operator cabin
11 Incoming belt conveyor
12 Hydraulic cylinder
13 Boom counterweight

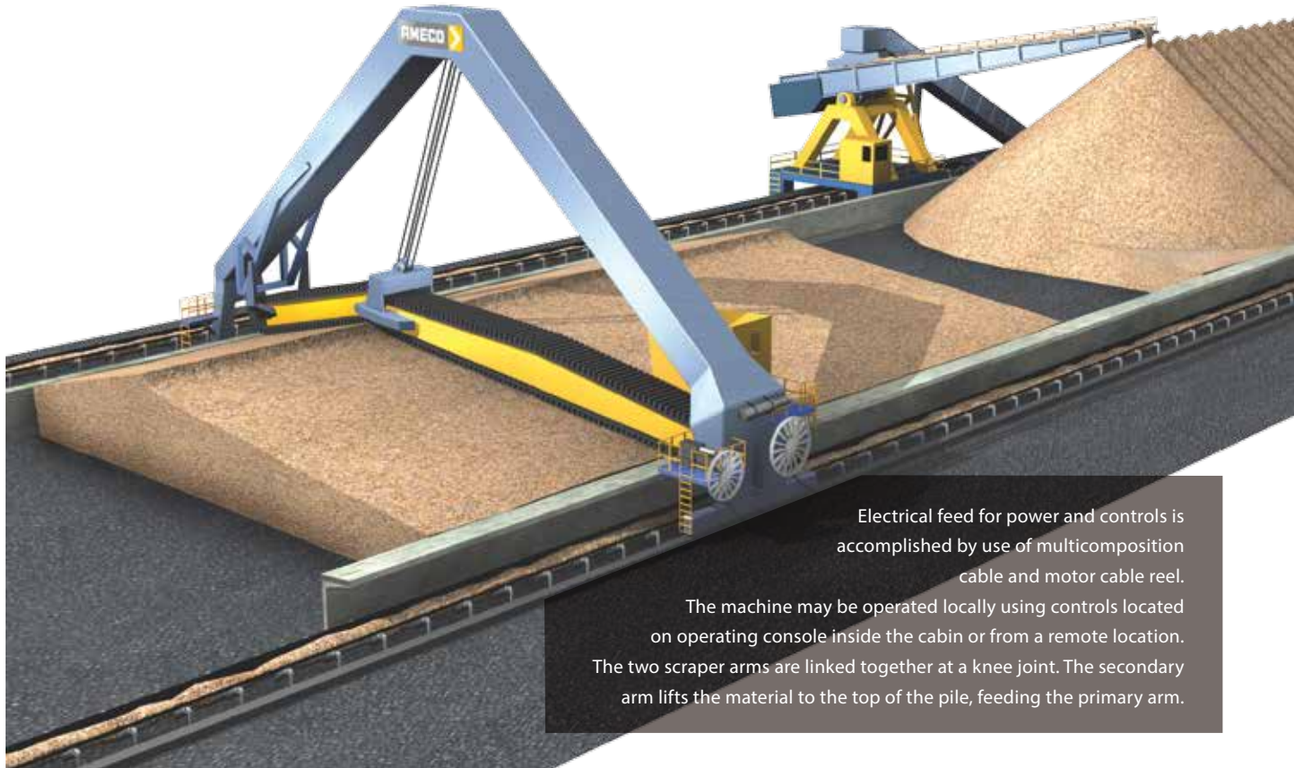

Electrical feed for power and controls is accomplished by use of multicomposition cable and motor cable reel.
The machine may be operated locally using controls located on operating console inside the cabin or from a remote location.
The two scraper arms are linked together at a knee joint. The secondary arm lifts the material to the top of the pile, feeding the primary arm.

SIDE SCRAPER STORE

The side scraper is used in a production line as small bulk material buffer store.
The store operates with stockpiles placed in line. While building up one pile, another pile is being reclaimed.
The store can be circular or longitudinal.

The input material comes on a rubber-belt conveyor and is discharged through the stacker traveling on rails alongside the store. Its height above the top of the pile is kept at a minimum distance to reduce dust emission.
Alternatively, stacking can take place by using a tripper car supported by a frame structure above the pile.
The stacker and the portal scraper travel on separate rails along the store.

The side scraper reclaims the material by means of a scraper chain which removes material from the pile, thanks to a scraper arm long enough to reach across the pile.
The arm is made of a boom equipped with chains and blades for dragging the material to a belt conveyor.

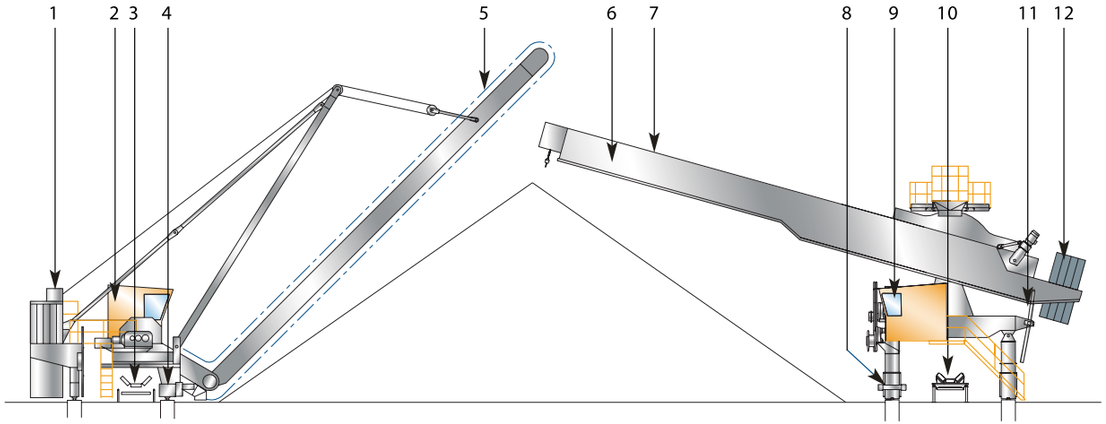

1 Hoist for raising and lowering chain
2 Operator cabin
3 Outgoing belt conveyor
4 Reclaimer bogie
5 Scraper chain
6 Jib
7 Belt conveyor on jib
8 Stacker bogie
9 Operator cabin
10 Incoming belt conveyor
11 Hydraulic cylinder
12 Jib counterweight

General performance of AMECO equipment
Max. capacity built : 2500m3/h – 1200TPH to 3000TPH
Max span built : 63.5m – 65m
Being one of the historically main product of AMECO since 1932, we have a strong knowledge in this system and this type of machine is mainly handling limestone and additives.

SLEWING RECLAIMER

In spite of the position in the middle of the stack and although this space cannot be used for stocking, the use of a shed is more rational than for other types of reclaiming machines.
The main advantage of this reclaimer lies in the fact that the stocking area can be used to the maximum. This reclaimer is designed to reclaim bulk materials from a reclaimer traveling in the pile.

This reclaimer is composed of the following main parts :

1. A scraper arm mounted on a slewing superstructure and also able to be luffed between horizontal and +45°. The reclaiming is achieved by means of blades bolted on chains located around the scraper arm.
2. A bucket elevator system
3. A self supporting conveyor arm with mobile hopper
3. A four-wheel undercarriage traveling on two rails

ROTARY SCRAPERS FOR PRILLING TOWERS

The chemical process of fertilizers like urea and ammonium nitrates can use what is called a prilling process.
The function of the process is to change the product from a liquid into a solid pebble by dropping it from the top of a tower into an ascending air draft thus forming prills which fall onto the floor of the tower.
On order to automatically reclaim these prills AMECO has developped a reclaimer designed 100% of the prills with close or no degradation of the product. The reclaimer is composed of a triangular shaped boom supporting adjustable and replaceable blades. This boom is suported onto a slewing ring with internal gear to be driven by an electrically powered drive composed of : motor, reducer, hydraulic coupling and spur gear pinion. The reclaimer rotates at the bottom of the tower and loads the prills onto a belt conveyor located below a trough installed inside the tower floor. The reclaimer is designed to fit to the shape of the floor of the prilling tower, that can be flat or conical.

CIRCULAR SCREW RECLAIMER

Ensuring a proper and consistent !ow of material is a key element in your production process. The Circular Screw Reclaimer will allow your facility to meet its chip supply requirements simply and e»ciently. A simple yet robust design, allows for ease of maintenance, long life and reliable operation.

AMECO Circular Screw Reclaimers can be customized to meet a variety of sizes and material types, such as wood chips, bark, saw dust and more.
As the screw rotates under the pile, material is feed onto a conveyor belt located under the centre of the pileand taken to the next stage of the process. The reclaim rate can be speci#ed, or can be adjusted as an optional feature.

The AMECO Circular Screw Reclaimer can be installed outside and underneath the open storage pile, or within a silo for completely contained storage requirements and can be fully automated.

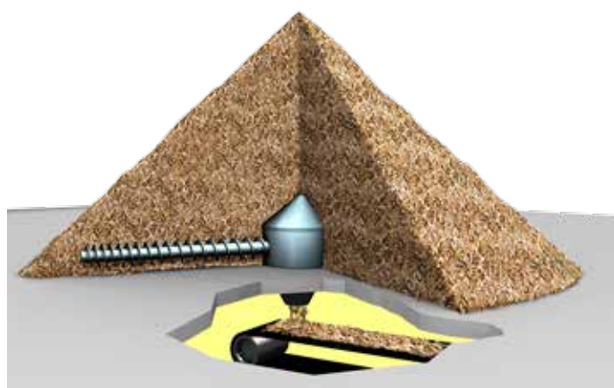

HOMOGENEIZING STACKER-RECLAIMERS SYSTEMS

PREHOMOGENISATION

A prehomogenising store is often necesary when the chemical composition of raw material varies greatly (e.g limestone, clay or coal).
The most common stacking methods are chevron, windrow and cone shell. These methods consist of stacking a large number of layers on top of each other in the direction of the pile.

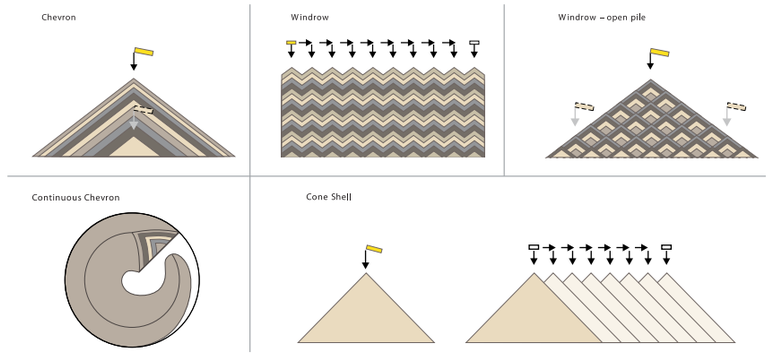

1. LONGITUDINAL HOMOGENIZING STACKER-RECLAIMER SYSTEM

The longitudinal stacker-reclaimer system operates with two piles. One pile is stacked while the other is being reclaimed.

The input material comes on a rubber-belt conveyor and is discharged through the stacker traveling on rails alongside the store at a constant speed. Its height above the top of the pile is kept at a minimum distance to reduce dust emission.
The reclaimer bridge moves alongside the pile onto two rails located on each side of the pile.

Reclaiming takes place from the face of the pile to be reclaimed by a harrow travelling on the bridge reclaimer. The sweeping movements of the harrow cause the material to slide on the pile base.
A scraper conveyor equipped with chains and blades drags the material to a belt conveyor located along the pile, and the material goes to the next process step.
Electrical feed for power and controls is accomplished by use of multi-composition cable and motor cable reel.
The machine may be operated locally using controls located on operating console inside the cabin or from a remote location.

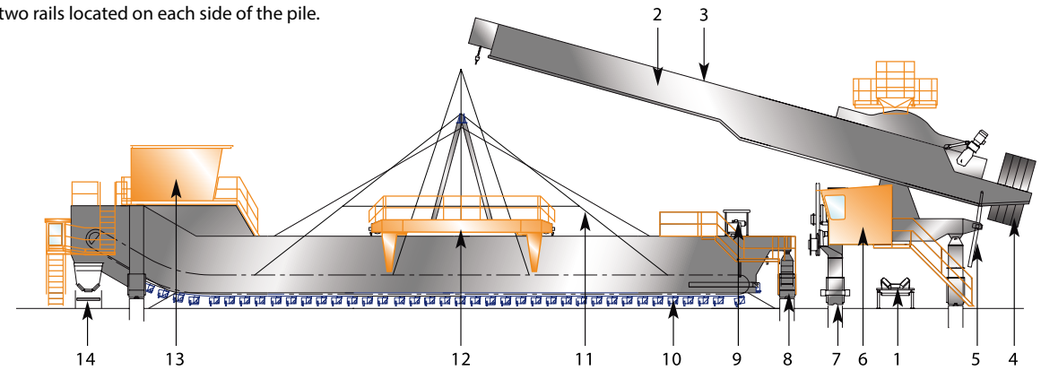

1 Incoming belt conveyor
2 Station boom
3 Conveyor belt
4 Counterweight
5 Luffing unit
6 Operator cabin
7 Stacker bogie
8 Reclaimer bogie
9 Hydraulic tensioning unit
10 Scraper chain
11 Raking harrow
12 Raking car
13 Operator cabin
14 Outgoing belt conveyor

2. CIRCULAR HOMOGENIZING STACKER-RECLAIMER SYSTEM

The circular homogenizing stacker-reclaimer system is staking material in one ring shaped pile. The stacker is located on the centre column, allowing rotation in both directions. Its height above the top of the pile is kept at a minimum distance to reduce dust emission.

The reclaimer bridge rotates around the central column.

Like the longitudinal reclaimer bridge, reclaiming takes place from the face of the pile to be reclaimed by a harrow traveling on the bridge reclaimer. The sweeping movements of the harrow cause the material to slide on the pile base.
A scraper conveyor equipped with chains and blades drags the material to a central hopper.
In order to maximize the storage capacity, the homogenised material leaves the store by an underground conveyor.

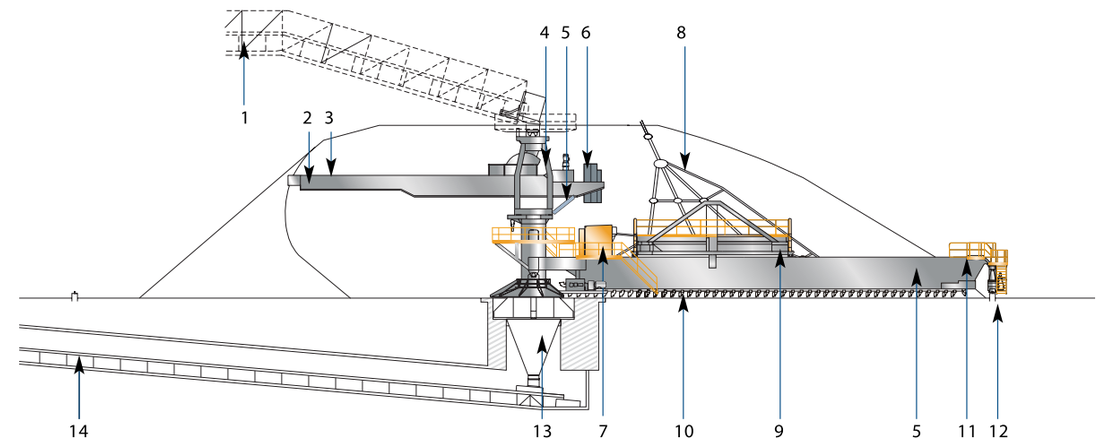

1 Incoming belt conveyor
2 Boom
3 Conveyor belt, jib
4 Central column
5 Luffing unit
6 Boom counterweight
7 Operator cabin
8 Raking harrow
9 Raking car
10 Scraper chain
11 Hydraulic chain tension unit
12 Bogie
13 Outlet hopper
14 Outgoing belt conveyor

CIRCULAR PORTAL STACKER RECLAIMER

An automated system allowing very large pile diameters and low profile bulding outlines tailored closely to the machine shape

These machines are designed around a central column solidly anchored to the ground via foundations or piling. The reclaimer is located at the lower portion of the system, and is composed of a portal structure with machinery room, made of heavy plates and sections, connected to the central column using a large diameter sluing ring without gear. The other side of the portal structure is fitted to a traveling truck with driven and idle wheels rolling on a crane rail of circular shape.Inside the machinery room, one hoisting drum using planetary gear reducer, allows to raise and lower the reclaimer arms.

At the lower portion of the machinery room structure, two smaller sluing rings connect the primary reclaiming boom to the machinery room allowing luffing movement of the boom, via a hoist drum and cable system located inside the machinery room. The upper hoist sheaves are installed inside the upper elbow element of the portal structure. Reclaiming is achieved by two beams connected together by sluing rings. These arms are fitted out with chains and blades for scraping the product from the pile and bringing it, via a chute located below the central column, to the reclaim conveyor installed in a tunnel below the store.

The chain devices are driven, via chain sprockets, by one, two or three spiral bevel gear reducers directly attached to the chain drive shafts. The chain required tension is achieved by using take-up screws fitted with bevel spring washers thus allowing enough elasticity to the take-up system to compensate for the chain jogging movement caused by the use of an eight tooth sprocket.

For some large machines, or upon customer's request, this take-up device can be arranged using hydraulic cylinders and hydraulic power pack..

This reclaimer type does not require the use of any counterweight unlike the CSS type machines.
The reclaimer is equipped with an operator cabin housing the electrical switch gear and PLC cabinet for both the stacker and the reclaimer.

Electrical feed is achieved by bringing power and control cables through one of the legs of the central column into a box located inside the central column allowing cable chain feeding.
A cable chain system or cable carts system is used for allowing a full 360° rotation to the reclaimer. This cable chain or cable carts system carries also the cables going from the motor control center and PLC cabinet to the stacker.

Should it be required for any reason whatsoever that the machines could be required to make several consecutive 360° rotations, it could be arranged using a collector ring inside of the central column.
The cable chain system would then only limit the movement in between the stacker and the reclaimer to a maximum of 360°

The operator cabin houses also an operator interface terminal allowing full control and monitoring of the reclaimer and the stacker. Access to the reclaimer is arranged from the bottom level at the pile center by a stair and generously sized platforms.
Another stairway is attached to the portal structure thus allowing also access from the road around the pile outskirt.

The access to the sluing stacker is achieved using ladders to an intermediate platform and further ladders to reach the two walkways on the stacker boom.

The stacker is located at the top of the central column and could be designed to carry some of the incoming loads of the field feeder conveyor. A sluing support is attached to the top of the central column using a large diameter sluing ring with internal gear. If conveyor loads are to be accounted for then a second sluing ring will be placed on top of the sluing support thus allowing to have an incoming conveyor support that is independent from the stacker sluing.

The incoming conveyor can then be supported on this structure by using a roller system eliminating the horizontal loads due to the heat expansion and conveyor take-up loads. The sluing movement of the stacker is achieved using a planetary gear with spur gear pinion engaging directly to the sluing ring internal gear.

The stacker boom is attached to the sluing support via tow pillow blocks and a shaft. Depending on the size of the stacker and also upon client's requirements, the luffing movement of this machine could be arranged using hoist winding drum and cable or hydraulic cylinders and power pack.

When hydraulic power pack and cylinders are used, the stacker counterweight is directly attached to the end of the luffing stacker boom for counterbalancing the boom overhang load and some of the product load. When cable hoist is used, the counterweight does not counterbalance the boom directly but only the sluing support.The hoist boom is equipped with conveyor pulleys, troughing and return idlers, belt scrapers, chutes and skirt boards, end baffle plate, and more generally all components required to design a safe conveyor system.

The stacker is controlled from the operator cabin located on the reclaimer. It can build piles in two different manners either cone shell type piles (the best suited) or chevron piles upon request by the operator.

Platforms located on each side of the stacker boom give easy access to all conveyor components. Conveyor is covered with easily opened covers. The boom is luffing using a hoisting system designed with reeling drum, cable and sheaves. via hydraulic coupling, and directly mounted to the chain drive shaft.

The large bay windows allow clear sight of the reclaiming area. A split system air conditioner is keeping the temperature inside the cabin to comfortable levels. Both switch gears for stacker and reclaimer are located inside this room.

The cabin is hanging from the side of the reclaimer portal structure. Access to the cabin is arranged with a stairway from the floor level at the center of the pile. Further access is arranged from the walkway at the outskirt of the pile over the portal reclaimer structure. A floodlight is installed on top of the cabin to illuminate the working zone.

WOODCHIPS CIRCULAR STACKER RECLAIMER SYSTEMS

The moste economical automatic storage facility using a stacker reclaimer system in outdoors applications

These machines are designed around a central column solidly anchored to the ground via foundations or piling. The reclaimer is located at the lower portion of the system, and is composed of a machinery room made of heavy plates and sections, connected to the central column using a large diameter sluing ring with gear.Inside the machinery room, two planetary type sluing drive gear reducers engage their pinions extending through the bottom of the structure, onto the sluing ring gearing, which is fixed with respect to the central column, thus allowing the reclaimer sluing movement.

At the lower portion of the machinery room structure, two smaller sluing rings connect the reclaiming boom to the machinery room allowing luffing movement of the boom, via a hoist drum and cable system located on top of the machinery room, and a hoisting boom attached to it. The reclaiming boom is fitted out with chains and blades for scraping the product from the pile and bringing it, via an elevating trough attached to the reclaimer machinery room, into a chute located around the lower portion of the central column.The chain device is driven, via chain sprockets, by one or two spiral bevel gear reducers directly attached to the chain drive shaft. The chain required tension is achieved by gravity using the catenary's effect of the chain upper strand. A screw type take-up is used for positioning the take-up sprockets and adjusting the length of the catenaries. The reclaimer boom vertical load is equilibrated using large concrete counterweights placed onto the machinery room tail portion, at the opposite side of the reclaimer arm connection. This counterweight is calculated to optimize the overhang load that is applied to the sluing ring.

The reclaimer is equipped with a motor control center housing the electrical switch gear and PLC cabinet for both the stacker and the reclaimer.
Electrical feed is achieved by bringing power and control cables through one of the legs of the central column into a box located inside the central column.
A cable chain system is used for allowing a full 360° rotation to the reclaimer if so desired. This cable chain system carries also the cables going from the motor control center and PLC cabinet to the stacker.
An operator cabin is located at an elevated level on the front of the machinery room. This cabin houses an operator interface terminal allowing full control and monitoring of the reclaimer and the stacker.

Access to the reclaimer is arranged from the bottom level by a short ladder first to allow the reclaimer to come very close to the reclaim conveyor, and then by stairways and generously sized platforms. The top of the machinery room is receiving a circular platform giving access to the sluing stacker. The stacker is located at the top of the central column and could be designed to carry some of the incoming loads of the field feeder conveyor.
A sluing support is attached to the top of the central column using a large diameter sluing ring with internal gear. If conveyor loads are to be accounted for then a second sluing ring will be placed on top of the sluing support thus allowing to have an incoming conveyor support that is independent from the stacker sluing.

The incoming conveyor can then be supported on this structure by using a roller system eliminating the horizontal loads due to the heat expansion and conveyor take-up loads. The sluing movement of the stacker is achieved using a planetary gear with spur gear pinion engaging directly to the sluing ring internal gear. The stacker boom is attached to the sluing support via tow pillow blocks and a shaft. Depending on the size of the stacker and also upon client's requirements, the luffing movement of this machine could be arranged using hoist winding drum and cable or hydraulic cylinders and power pack. When hydraulic power pack and cylinders are used, the stacker counterweight is directly attached to the end of the luffing stacker boom for counterbalancing the boom overhang load and some of the product load. When cable hoist is used, the counterweight does not counterbalance the boom directly but only the sluing support.The hoist boom is equipped with conveyor pulleys, troughing and return idlers, belt scrapers, chutes and skirt boards, end baffle plate, and more generally all components required to design a safe conveyor system. The stacker is controlled from the operator cabin located on the reclaimer. It can build piles in two different manners either cone shell type piles (the best suited) or chevron piles upon request by the operator.

"All of your requirements will be adhered to, just inform us of your specific needs Ameco systems are designed to follow your specific requests."

Our machines allows for large reclaiming and stacking capacities and rates, either for indoor or outdoor application. Full automatic operation, no operators needed. Highly accurate reclaiming rate with fine tunning and remote setting. Full self diagnostic with programmable controller and operator interface terminal.

"All stacking modes can be selected from the local operator interface terminal. Stacking modes are : chevron mode, windrow mode, axial mode or cone shell mode."

Main drives such as belt, and hoist drives are designed with enclosed gears, eliminating the need for secondary gearing. Only the traveling and sluing movements are designed using secondary open gears such as spur gear ring on the powered wheels, spur gears on large diameter sluing rings for circular stackers.

AMECO'S systems are designed for the greatest projects

MISSION IMPOSSIBLE SUCCESSFUL

in operation 6 months A.R.O.

Early January, the client called a meeting in Longyearbyen to discuss the possibility of installing a new port facility near the Svea coal mine, in Sptizbergen.
After two days of travelling we arrived in a land of complete darkness.

A good layer of snow was on the runway and the pilots explained us that they were very much used to this type of situations. Coming out of the plane was uneasy, as a bitter cold wind was greeting our arrival with large tick flakes. Due to a decision of the client, we were not asked to go to the mine area as no one was sure that we would be able to make it back due to bad weather conditions. The meetings took then place in the client's offices in Longyearbyen.

During the first discussions with the client it became apparent that very strict delivery dates would be required in order to comply with the stringent weatherconditions of the area and the fact that it was of the utmost necessity that the coal being produced be exported during the same year. Normally such machines are delivered FOB port of export in a time frame of eleven to thirteen month there is to be added travelling time
on the ship, unloading and erection which could is such area be as much as two and a half month.

In this case the client made it clear that he wished that the machine with the complete conveyor belt installation should be commissioned by July 15th, as the first ship could be loading coal at such date.

We then inquired about the possibilities coalat such date. We then inquired about the possibilities of crane hiring in the area and were informed that the largest one would be a 25 ton crane.

Furthermore, the client did not have a suitable existing jetty and that such will have to be constructed to allow shiploader erection.

We decided then that due to all these conditions that the only possible solution would be to erect and test the machine somewhere at a port and load it onto a ship or a barge to bring it in due time to the site thus leaving sufficient time for a partial jetty construction long enough to accommodate the shiploader in the beginning

MISSION IMPOSSIBLE STARTS

On January 21 the agreement was signed and then Mission Impossible started.
Due to all client and weather constraints, the machine had to be redesigned practically from scratch. The long lead items purchase orders were placed within the month of January, and the structural manufacturer was selected right away, not on price but on delivery capabilities. The drawings were fed to the structural shop as soon as they became available.

Of course, the client had waived its right to comment on the drawings, but this was even more bearing on us since the site conditions had never been dealt with by our engineers.

Mid of April, the client visited the structural manufacturing shop and saw already many large structures being completed. Although the battle was not won yet, he was somewhat reassured that we were in the right direction. The port of Gdansk was chosen for erecting the machine on the grounds that the structural steel shop was Polish, and that the port of Gdansk is on the North Sea.

The erection took two month but mostly due to the fact that importing goods into Poland is not so easy and requires much time and efforts.

THE VOYAGE TO THE POLE

When finally the ship arrived several days after originally planned, it wasa brand new ship who made its maiden voyage with our machine, our shiploader was fully tested and inspected everything was fine.
The only parts that could not be installed onto it were one counterweight brace that the shipping engineers informed us we should not attach because of interference with the cranes manoeuvring, the seventy tons counterweight and the telescopic loading tube with its belt slinger.
These last items could create unsafe conditions during the journey at sea. The shiploader was lifted on deck by the own cranes of the heavy-lift carrier and lashed heavylift carrier and lashed down to the deck using numerous cables and manilas.

We departed on the evening of July 9th and after an eight hours interruption due to some bolts shearing from the ship engine exhaust pipe, and some heavy winds along the Norwegian shores we came to see the Spitzbergen Island in the night of July 12th to 13th. No it was not night but daylight since at these times there is permanent daylight in the Polar Circle. We finally reached our final destination around eight in the morning and were greeted by the client who could not believe his eyes. Three days before the rail tracks were not even installed on the short portion of jetty that was in the process of being built. Unloading took until seven in the evening and then we had twenty four hours on hand to use the ships cranes for completing the erection.

The brace and the counterweight were attached to the machine the same night, and the next day the loading spout and the belt slinger were attached. The cable reel cable was connected to the feeding point and electrical connections were made to the loading spout. At three in the afternoon, the ship left and small tests were carried on.

On July 8th, the shiploader was already tested and completely erected except for the counterweight box and loading chute with belt slinger, as well as one of the counterweight braces all these items that could endanger the safety of the journey at sea while sailing to the Spitzbergen Island final destination Svea.

The ship arrived late afternoon and the loading took the major portion of the night, and lashing, another twelve hours.
On our journey to final destination, we had to cross under the new bridge connecting Sweden to Denmark. The bridge is only 55 meter above sea level and optically it looked as we were not going to clear the bottom of the bridge. A rapid calculation shiploader height about 35 meters plus ships height unknown but estimated at least 15 meters above deck, prompted us to brace ourselves for the impact. Of course, the shipping agency had checked all this before and the Captain let his ship go at the full speed of 22 Knot to its encounter.

Finally we passed and pressure dropped. On our journey, after some hardship due to a failure of the bolts attaching the exhaust pipe to the main ship engine, and staying for eight hours on the anchor, we were blessed with force 7 and 8 winds along the Norwegian shores for a full day.
On July 13th early morning, we have entered the Van Mijen Fjord and are sailing in between two rows of glaciers covered mountains.

Daylight is 24 hours in this zone at that time of year.

"The shiploader is the last piece of equipement in the material handling system. The shiploader's position, at the end of the product stream, must be failure free."

AMECO shiploader are available either for bulk handling, or bag handling, or bag and bulk depending on thre tool connected on the shiploader.
In order to easily intechange the tools on the shiploader, a resting tower can be placed at one end of the jetty. The resting tower is designed to receive either the bulk loading spout, telescopic loading tube or the bag loading spiral chute.
An operator cabin is located on the same level as the counterweight boom and is accessible by the platform looking towards the shiploader luffing boom.
The top of the traveling bridge receive the conveyor system. Access is given to all maintenance points by way of stairs and ladders.

The correct tool for the proper job. Depending on the product being loaded, the kind of ships and the rate of loading, the proper tools must be used. These tools are connected to the end of the shiploader boom. AMECO offers a wide selection of tools with the possibility to be connected on all shiploaders :

Cascade chute with spout

UREA Bell slinger

UREA Bags spiral chute

Telescopic chute

Shiploader Data

Ship Sizes max	61,000 DWT
Ship Sizes min	20 000 DWT
Loading Rate	2000 t/h
Product handled	Coal
Product Density	0.85
Product Size	50 mm
Loading device	Belt Slinger
Rail center distance	10 m
Bomm Length	27.5 m
Sluing Angle	+/- 75°
Total Weight	230 t
Total Power inst	270 kW
Total Power used	200 kW

Detail of hoisting drum and Safety brake

Maxi boom upper position	+ 45 °
Maxi boom lower position (at erection)	- 30°
Hoisting speed at bail	2,3 m/min
Number of cable	2
Cables diameter	28 mm
Motor's power	37 kW
Safety brake release power pack motor power	2.2 kW

Detail of boom belt drive pulleys

Belt Width	1600 mm
Belt speed	2.45 m/sec
Troughing Angle	20°
C. to C. Pulleys	27.5 m
Drive Power	75 kW

Feeder Belt Details

Belt Width	1400 mm
Belt speed	2.95 m/sec
Troughing Angle	45°
C. to C. Pulleys	11 m
Drive Power	45 kW

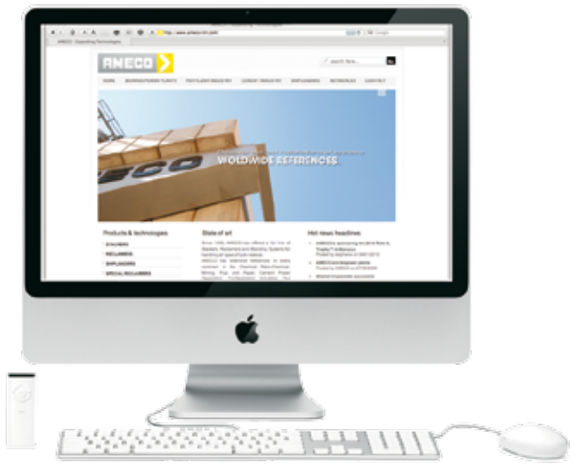

UPDATE AND HIGHTLIGHTS ON
www.ameco-fr.com

AMECO major clients

tenova LAFARGE eni GP PotashCorp FLUOR TOTAL RioTinto FLSmidth ALSTOM Holcim TAKREER IFFCO

The Power of Know-How

HEADQUARTERS
43, rue du 21 Novembre
68720 ILLFURTH - France
Tél. : +33(0)3 89 25 59 69
Fax : +33(0)3 89 25 59 68

NORTH AMERICAN OFFICE
James White
VP Business Development
AMECO North America
1191 Chess Dr. Suite F
Foster City, CA 94404
Cell : (617) 818-3332
Phone : (626) 628-1970

INDIA REPRESENTATIVE OFFICE
Natacha CHAPON
House N°2, 3rd floor
Hauz Khas Village
NEW DELHI 110016 - INDIA
Phone : +91 11 46 16 16 03